Εισαγωγή στον Προγραμματισμό

Εισαγωγική ενότητα (25%) : Βασικές έννοιες και τομείς της Επιστήμης Υπολογιστών 2η ομιλία

Παναγιώτης Τζουνάκης

Χειμώνας 2026



Τμήμα Μαθηματικών
Αριστοτέλειο Πανεπιστήμιο Θεσσαλονίκης



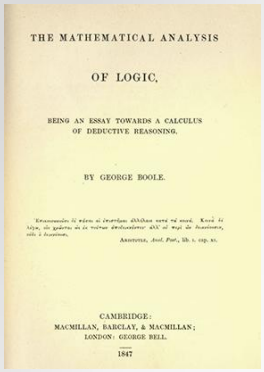
THE MATHEMATICAL ANALYSIS

OF LOGIC,

BEING AN ESSAY TOWARDS A CALCULUS OF DEDUCTIVE REASONING.

BY GEORGE BOOLE.

CAMBRIDGE:
MACMILLAN, BARCLAY, & MACMILLAN;
LONDON: GEORGE BELL.

1847

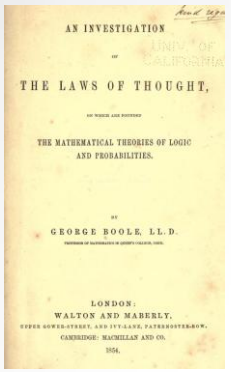
AN INVESTIGATION

OF

THE LAWS OF THOUGHT,

THE MATHEMATICAL THEORIES OF LOGIC AND PROBABILITIES.

BY

GEORGE BOOLE, LL.D.

LONDON:
WALTON AND MABERLY,

CAMBRIDGE: MACMILLAN AND CO.

1854.

Άλγεβρα Boole

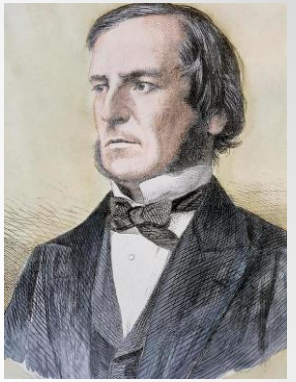

https://en.wikipedia.org/wiki/Boolean_algebra

Βασικές πράξεις:

ΚΑΙ – σύζευξη (AND – conjunction) : $x \wedge y$ (x AND y)

Η – διάζευξη (OR – disjunction) : $x \vee y$ (x OR y)

ΟΧΙ - άρνηση (NOT – negation) : $\neg x$ (NOT x, Nx ή !x)

Πίνακες αληθείας

x	y	$x \wedge y$	$x \vee y$
0	**0**	0	0
1	**0**	0	1
0	**1**	0	1
1	**1**	1	1

x	$\neg x$
0	1
1	0

Άλγεβρα Boole

https://en.wikipedia.org/wiki/Boolean_algebra

δευτερεύουσες πράξεις: Υλική συνεπαγωγή, Αποκλειστικό Η (Exclusive OR – XOR), Ισοδυναμία (equivalence)

$$x \to y = \neg x \lor y$$

$$x \oplus y = \neg(x \equiv y) = (x \lor y) \land (\neg x \lor \neg y) = (x \land \neg y) \lor (\neg x \land y)$$

$$x \equiv y = \neg(x \oplus y) = (x \land y) \lor (\neg x \land \neg y)$$

Πίνακες αληθείας

x	y	$x \to y$	$x \oplus y$	$x \equiv y$
0	**0**	1	0	1
1	**0**	0	1	0
0	**1**	1	1	0
1	**1**	1	0	1

Άλγεβρα Boole

Νόμοι (κατ' αναλογία με συνήθη άλγεβρα με + αντί ∨ και * αντί ∧)

Associativity of ∨:	$x \vee (y \vee z) = (x \vee y) \vee z$
Associativity of ∧:	$x \wedge (y \wedge z) = (x \wedge y) \wedge z$
Commutativity of ∨:	$x \vee y = y \vee x$
Commutativity of ∧:	$x \wedge y = y \wedge x$
Distributivity of ∧ over ∨:	$x \wedge (y \vee z) = (x \wedge y) \vee (x \wedge z)$
Identity for ∨:	$x \vee 0 = x$
Identity for ∧:	$x \wedge 1 = x$
Annihilator for ∧:	$x \wedge 0 = 0$





Άλγεβρα Boole

Νόμοι (δεν ισχύουν στη συνήθη άλγεβρα με + , *)

Annihilator for $\vee$:	$x \vee 1 = 1$
Idempotence of $\vee$:	$x \vee x = x$
Idempotence of $\wedge$:	$x \wedge x = x$
Absorption 1:	$x \wedge (x \vee y) = x$
Absorption 2:	$x \vee (x \wedge y) = x$
Distributivity of $\vee$ over $\wedge$:	$x \vee (y \wedge z) = (x \vee y) \wedge (x \vee z)$





Άλγεβρα Boole

Κι άλλοι νόμοι!
Για το συμπλήρωμα :

Complementation 1	$x \wedge \neg x = 0$
Complementation 2	$x \vee \neg x = 1$

Διπλή άρνηση:

$$\neg(\neg x) = x$$

Νόμοι De Morgan:

$$\neg x \wedge \neg y = \neg(x \vee y)$$
$$\neg x \vee \neg y = \neg(x \wedge y)$$

Διαγράμματα Venn για πράξεις στην άλγεβρα Boole :

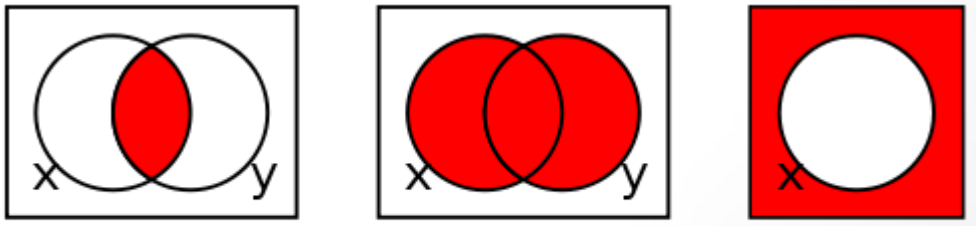

x∧y x∨y ¬x

Άλγεβρα Boole και ψηφιακές λογικές πύλες

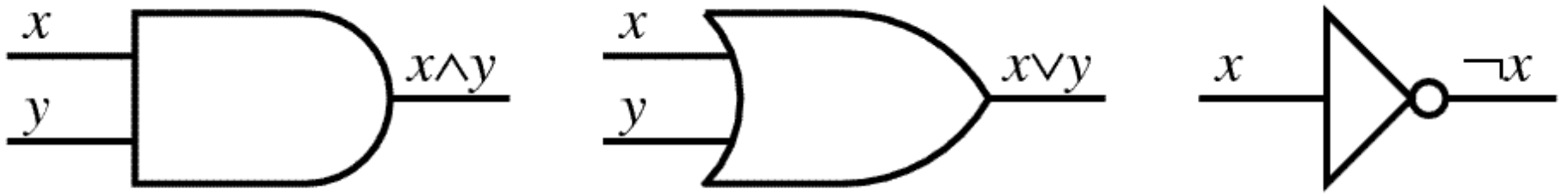

Figure 3. Logic gates

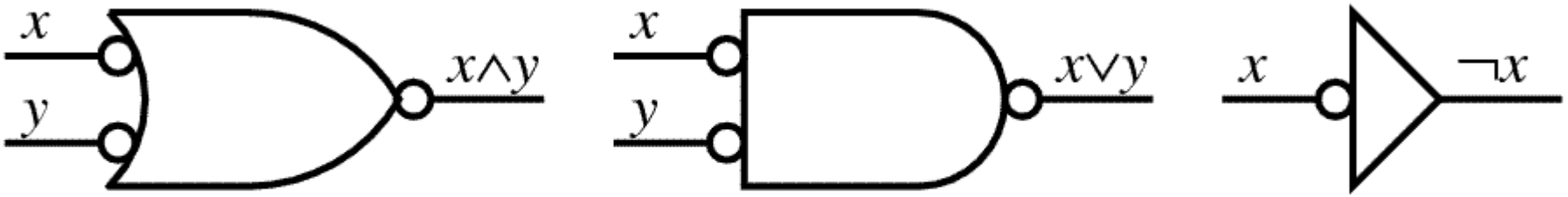

Figure 4. De Morgan equivalents

Αντιστρεψιμότητα (reversibility) υπολογισμών

- Φυσική και λογική αντιστρεψιμότητα
  https://en.wikipedia.org/wiki/Reversible_computing

AND

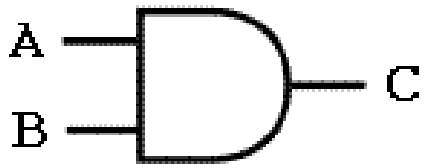

Inputs		Output
A	B	C
0	0	0
0	1	0
1	0	0
1	1	1 ✓

OR



Inputs		Output
A	B	C
0	0	0 ✓
0	1	1
1	0	1
1	1	1

NOT

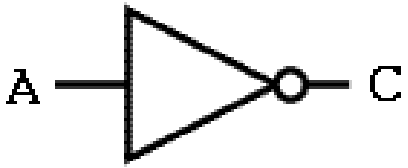

Input	Output
A	C
0	1 ✓
1	0 ✓



Δείτε την αρχή και το όριο του Landauer https://en.wikipedia.org/wiki/Landauer's_principle

Ψηφιακά κυκλώματα

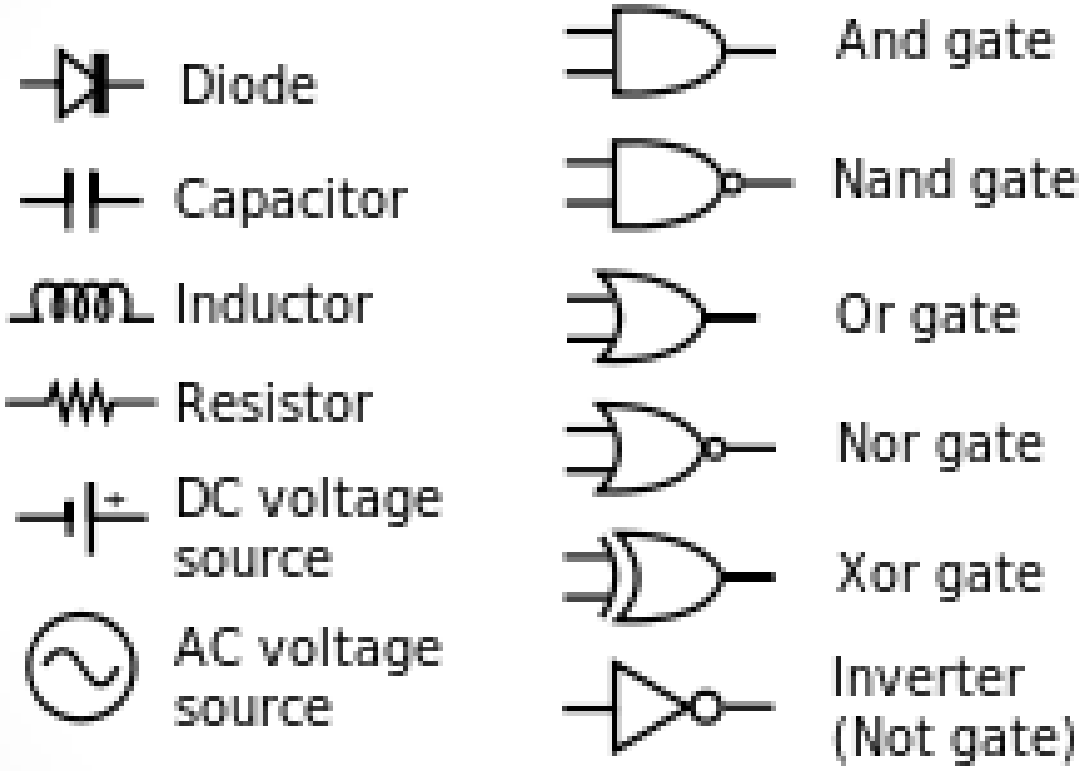

Συνήθη σύμβολα σε σχηματικά διαγράμματα κυκλωμάτων

Ψηφιακά κυκλώματα

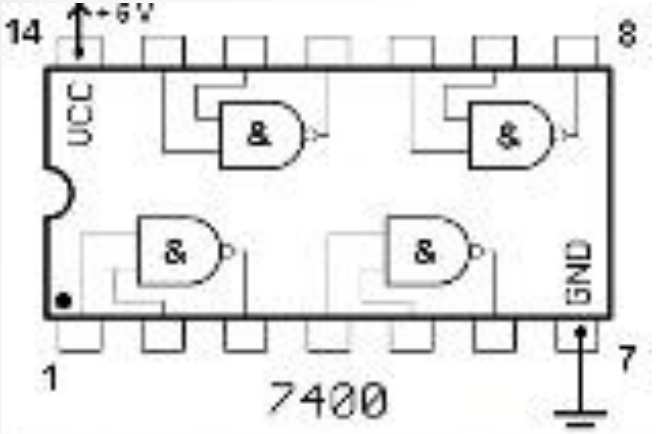



Ακολουθιακό κύκλωμα

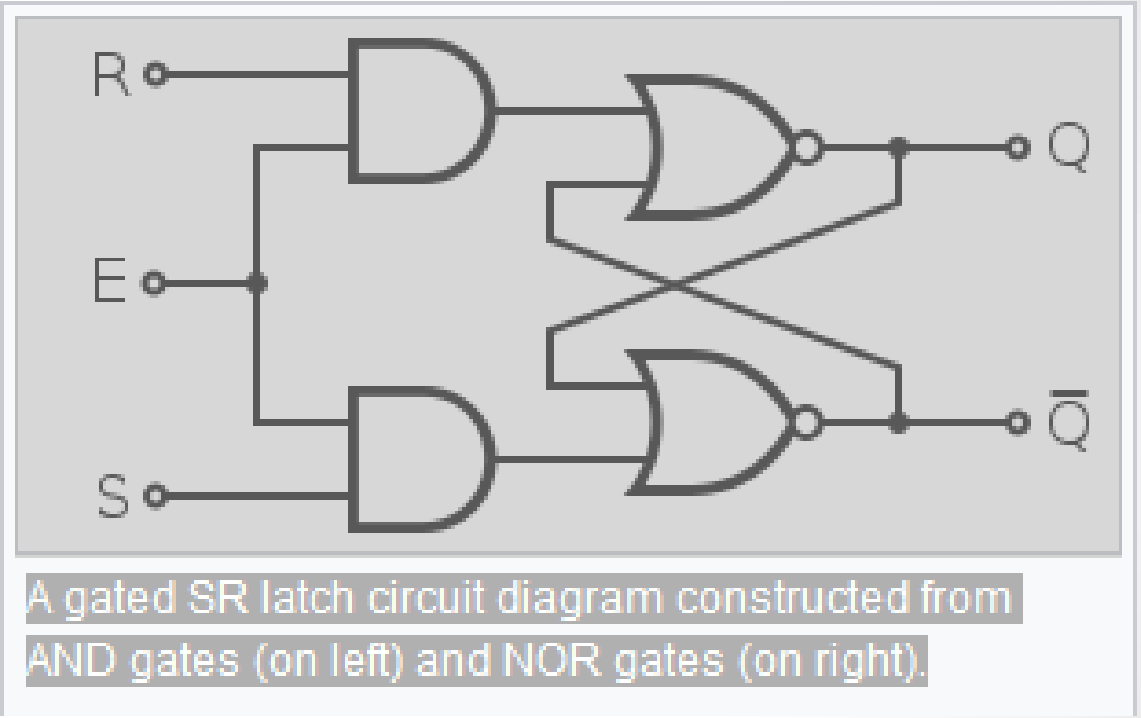

A gated SR latch circuit diagram constructed from AND gates (on left) and NOR gates (on right).

«τσιπάκι» (αριστερά) και μανταλωτής (δεξιά)
βλ. https://en.wikipedia.org/wiki/Logic_gate#Symbols και
https://en.wikipedia.org/wiki/Flip-flop_(electronics) αντίστοιχα

Ψηφιακά κυκλώματα



1952: (πάνω) Διατυπώνεται η ιδέα κατασκευής ολοκληρωμένου κυκλώματος από τον Geoffrey Dummer.

1959: (κάτω) Ο εφευρέτης του πρώτου μονολιθικού ολοκληρωμένου κυκλώματος Robert Noyce.



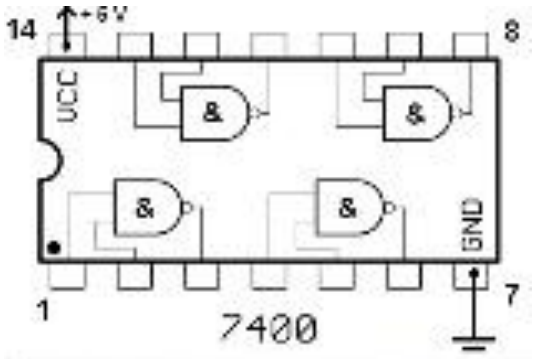



https://en.wikipedia.org/wiki/7400-series_integrated_circuits

Ακολουθιακό κύκλωμα

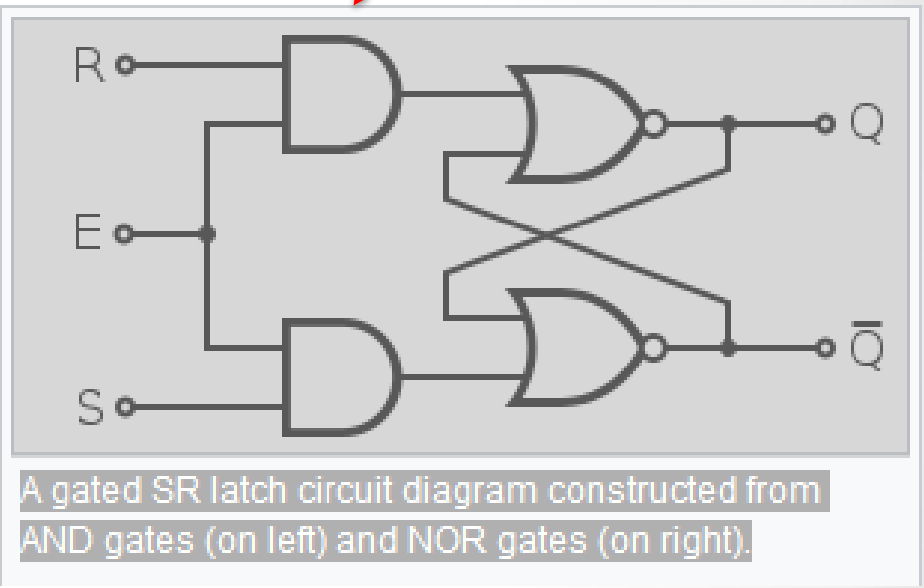

A gated SR latch circuit diagram constructed from AND gates (on left) and NOR gates (on right).

«τσιπάκι» της δεκαετίας 1980 (αριστερά) και μανταλωτής (διάγραμμα δεξιά) βλ. https://en.wikipedia.org/wiki/Logic_gate#Symbols και https://en.wikipedia.org/wiki/Flip-flop_(electronics) αντίστοιχα

Αριθμητικές πράξεις με άλγεβρα Boole

Συνδυαστικό κύκλωμα

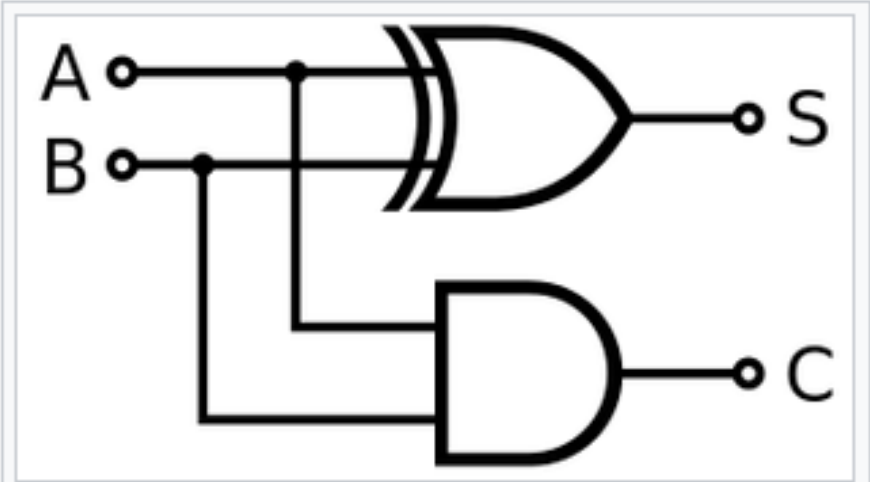

Half adder logic diagram

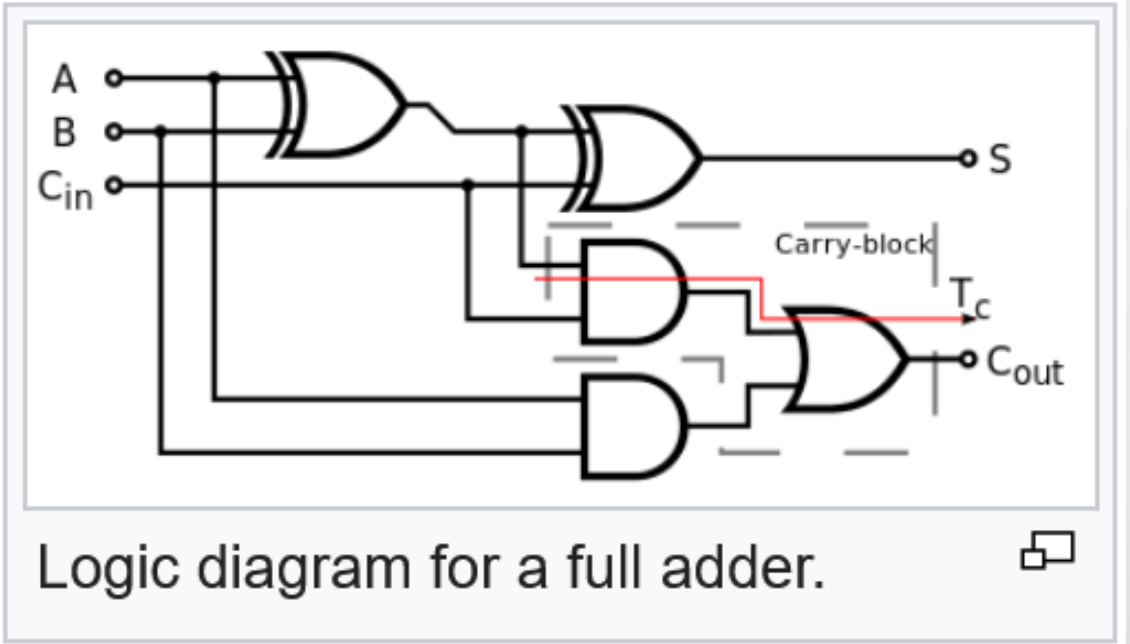

Logic diagram for a full adder.

https://en.wikipedia.org/wiki/Adder_(electronics)

Ψηφιακή Σχεδίαση

Στάδια κατασκευής ολοκληρωμένου κυκλώματος (chip)

https://en.wikipedia.org/wiki/Integrated_circuit_design

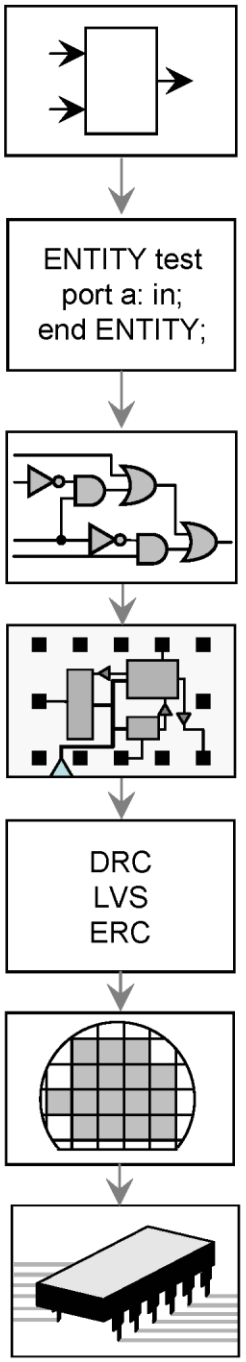

System Specification
Architectural Design
Functional Design and Logic Design
Circuit Design
Physical Design
Physical Verification and Signoff
Fabrication
Packaging and Testing
Chip

Ψηφιακή σχεδίαση

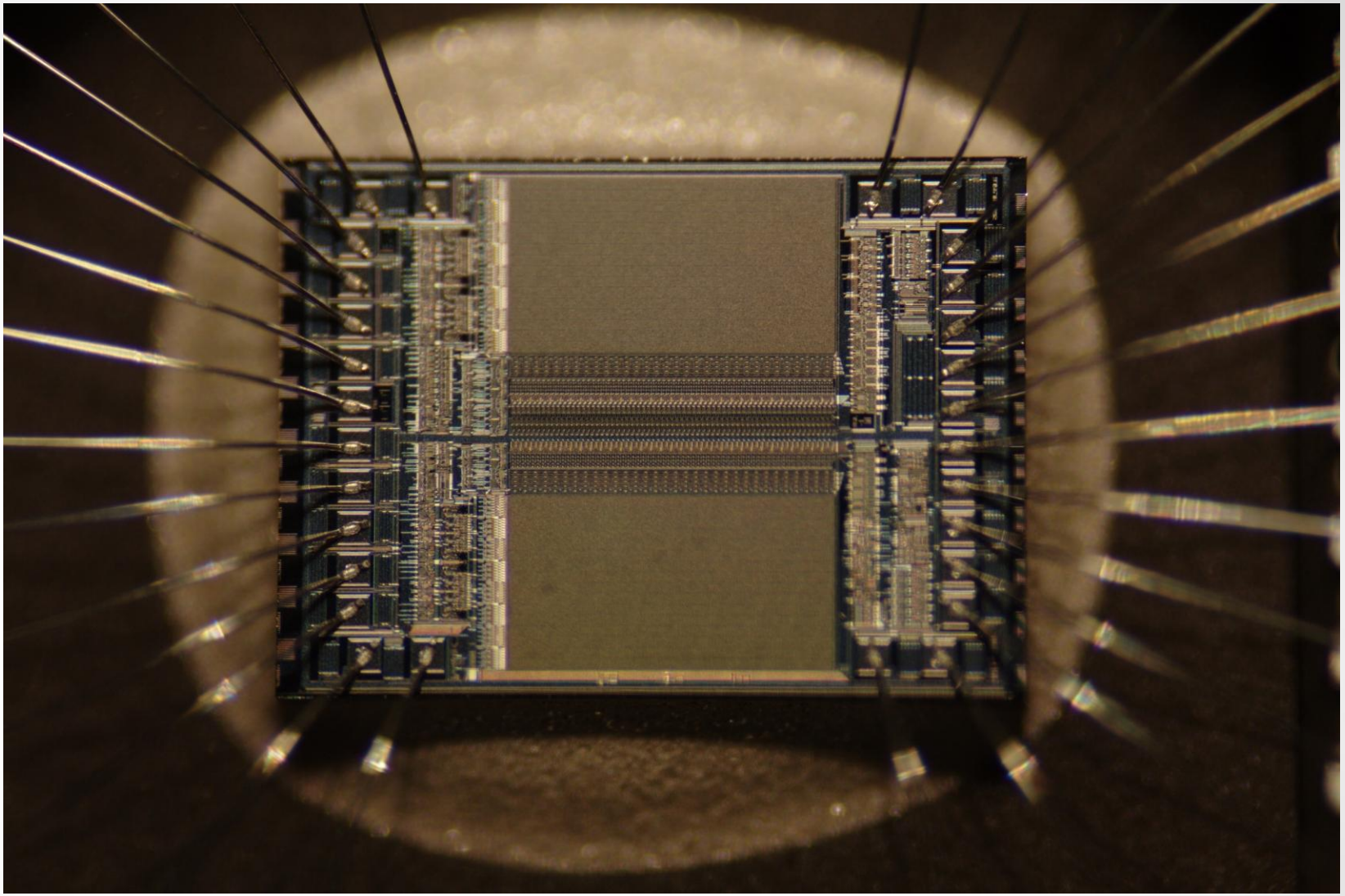

Integrated circuit from an EPROM memory microchip showing the memory blocks, the supporting circuitry and the fine silver wires which connect the integrated circuit die to the legs of the packaging

Από την ψηφιακή σχεδίαση στην αρχιτεκτονική Η/Υ

- Συνδυαστικά κυκλώματα (συνδυαστική λογική – combinational logic)
- Ακολουθιακά κυκλώματα (ακολουθιακή λογική – sequential logic) υλοποιεί μνήμη!

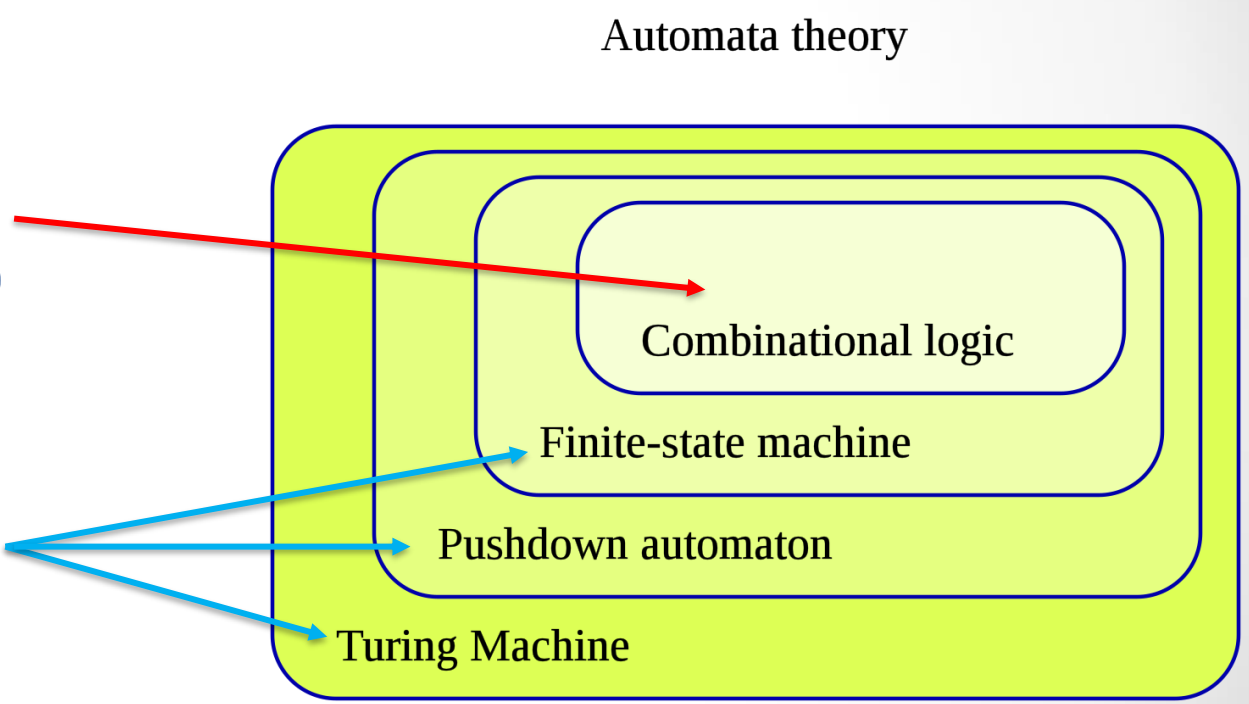

Μοντέλα υπολογισμών

Η μηχανή του Turing

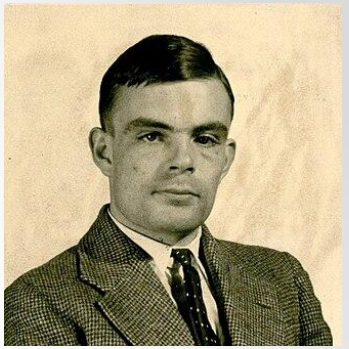

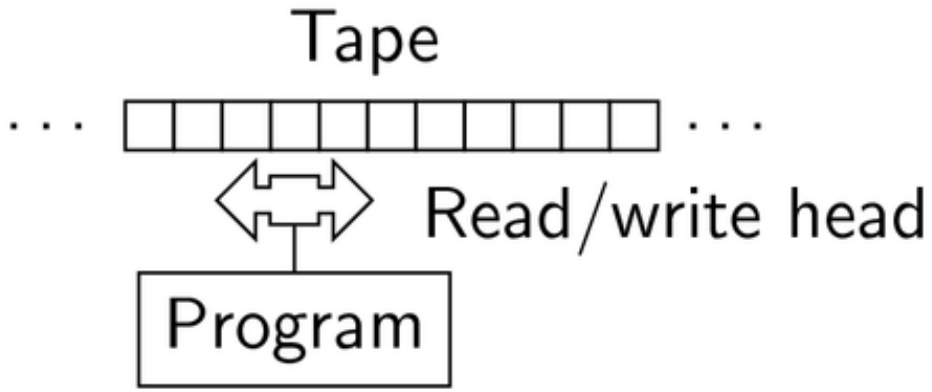

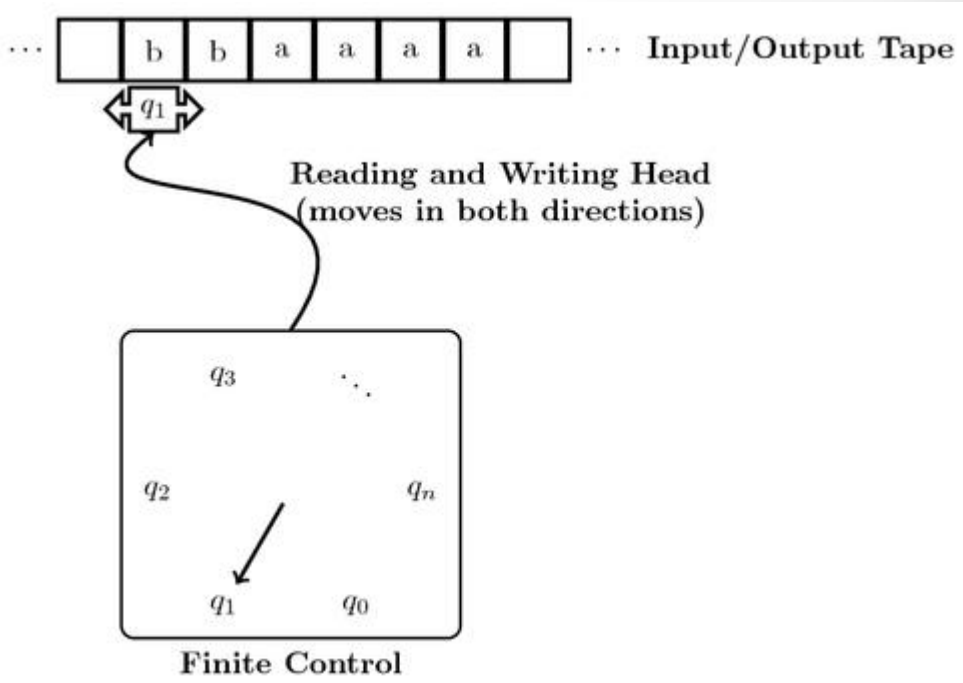

https://en.wikipedia.org/wiki/Turing_machine

Universal Turing Machine

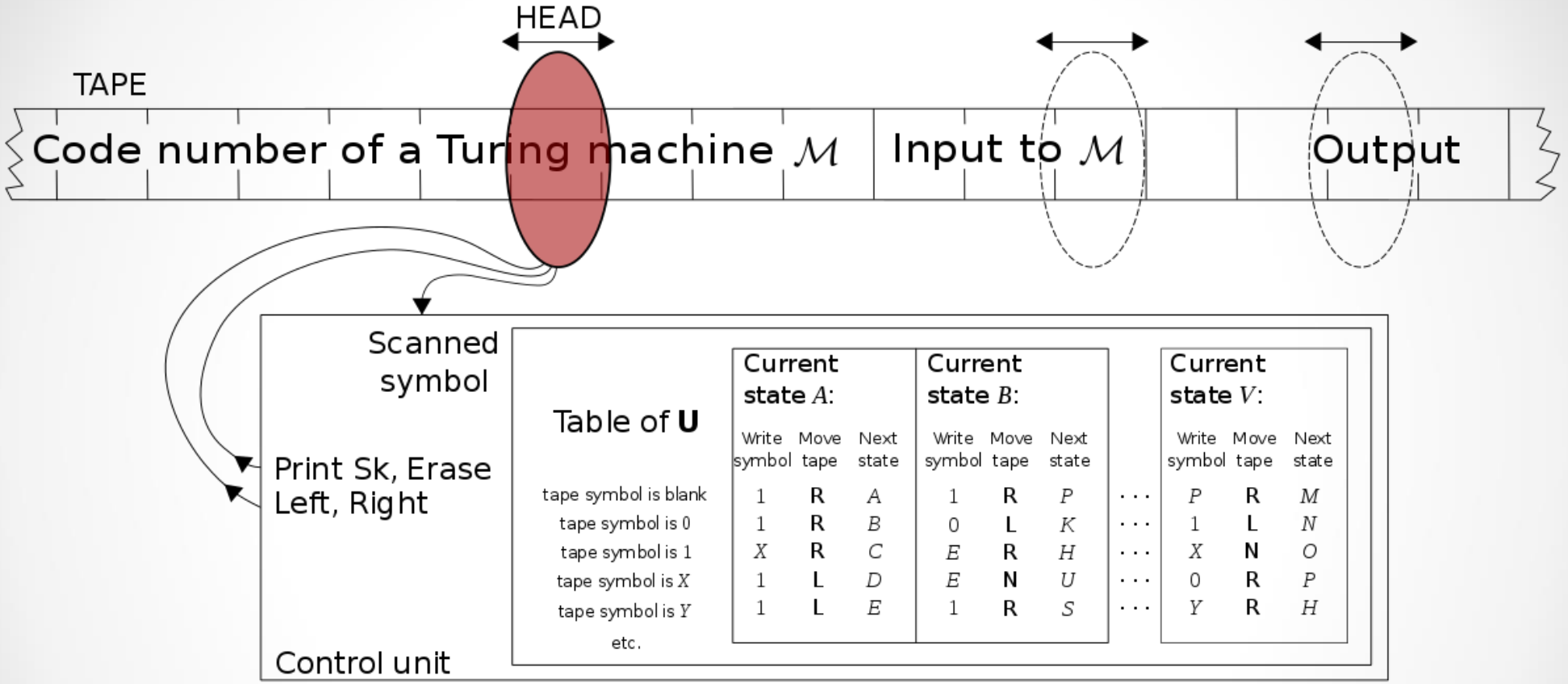

https://en.wikipedia.org/wiki/Universal_Turing_machine

"…the origin of the idea of a stored-program computer used by John von Neumann in 1946 for the "Electronic Computing Instrument" that now bears von Neumann's name: the von Neumann architecture.[1] "

Αρχιτεκτονική Η/Υ

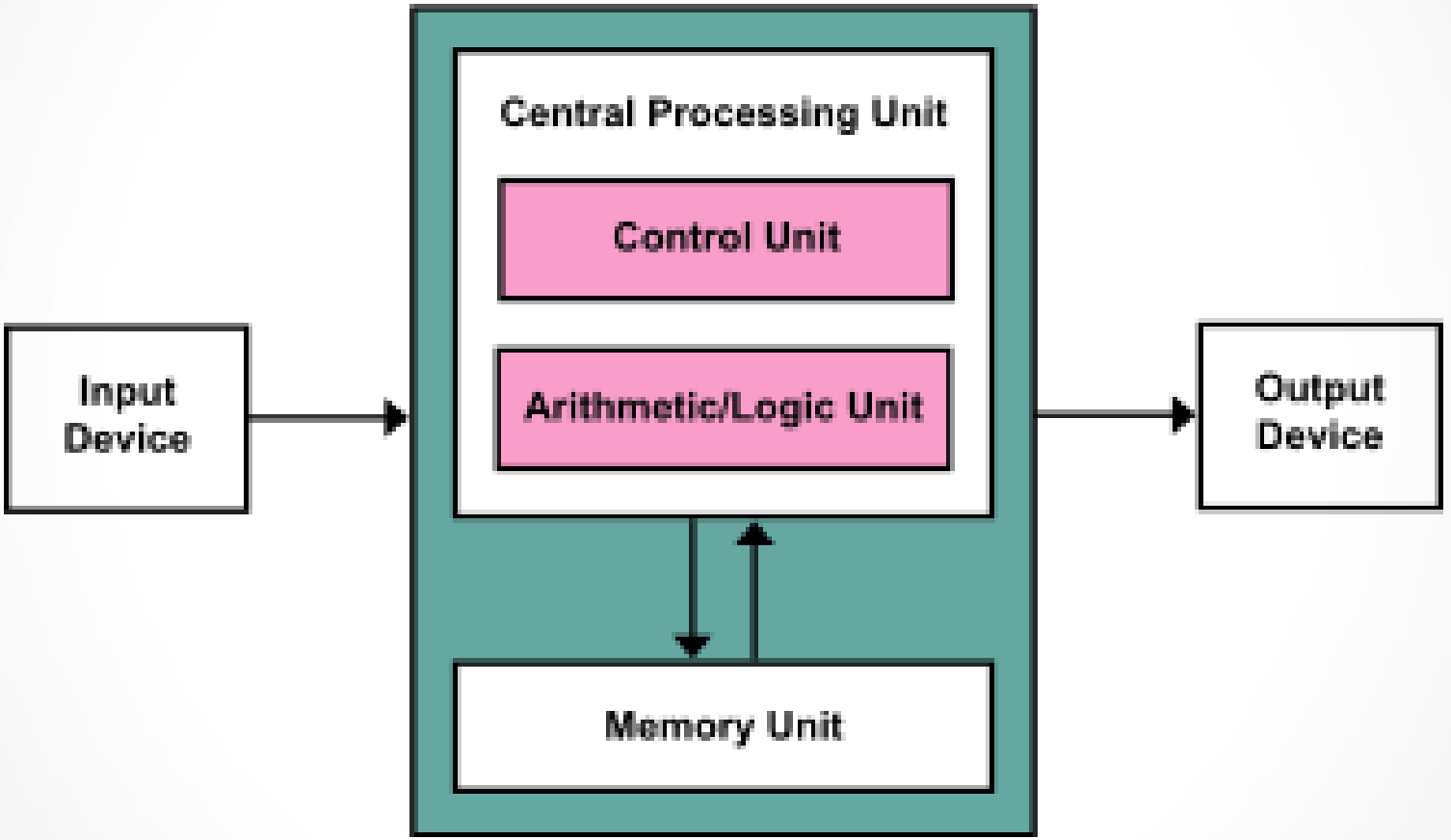

Αρχιτεκτονική **von Neumann**

ΟΔΗΓΟΣ ΣΠΟΥΔΩΝ
2021 - 2022





Αρχιτεκτονική von Neumann

Οδηγός σπουδών 2021-22

https://drive.google.com/file/d/1MDznpDkSSWurOSABAUtrrUB8csyNgvEh/view

Αρχιτεκτονική Η/Υ

Μεταφορά bits
=>
von Neumann
bottleneck

προσκόμισε (fetch)

αποκωδικοποίηση (decode)

εκτέλεση (execution)

αποθήκευση (store)

Απλουστευμένη παρουσίαση σταδίων εκτέλεσης εντολής μηχανής στη CPU

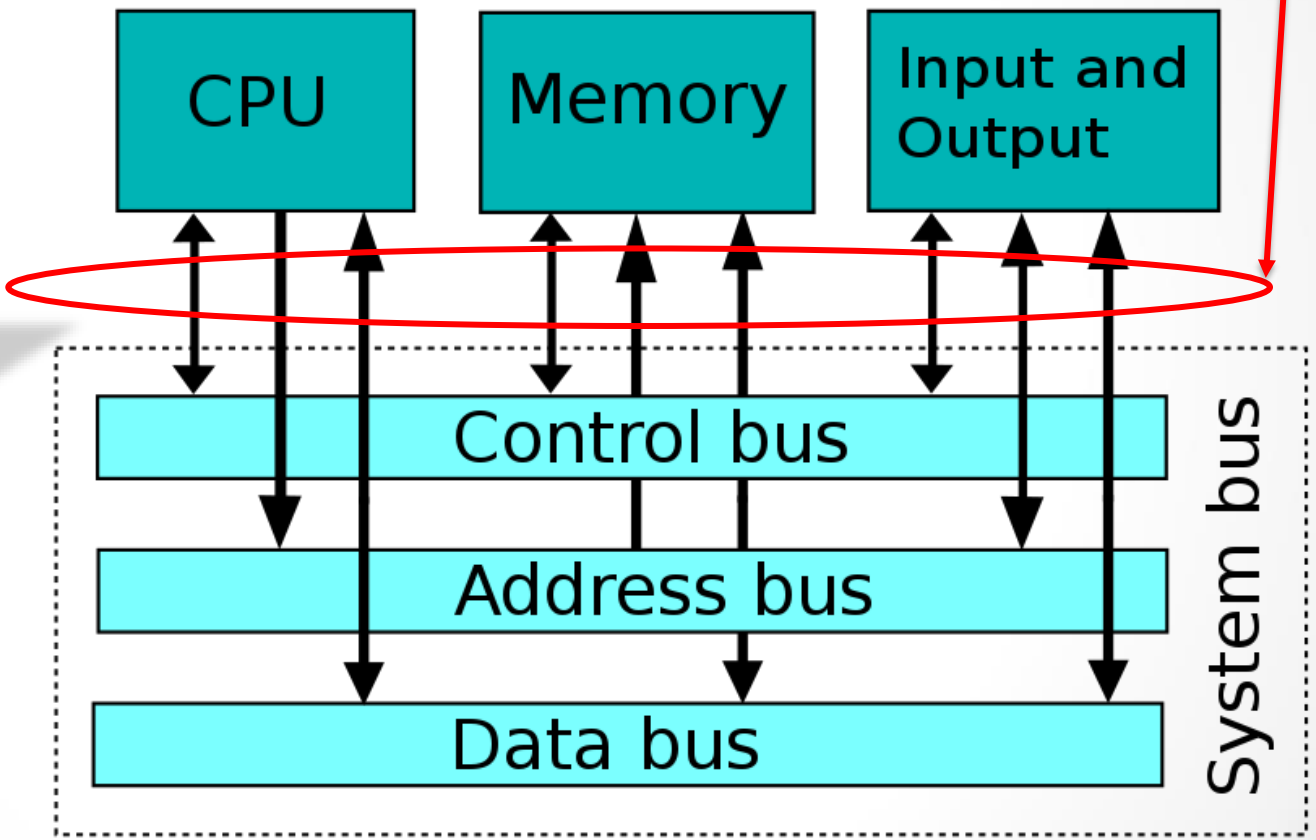

Αρχιτεκτονική **von Neumann**

Αρχιτεκτονική Η/Υ

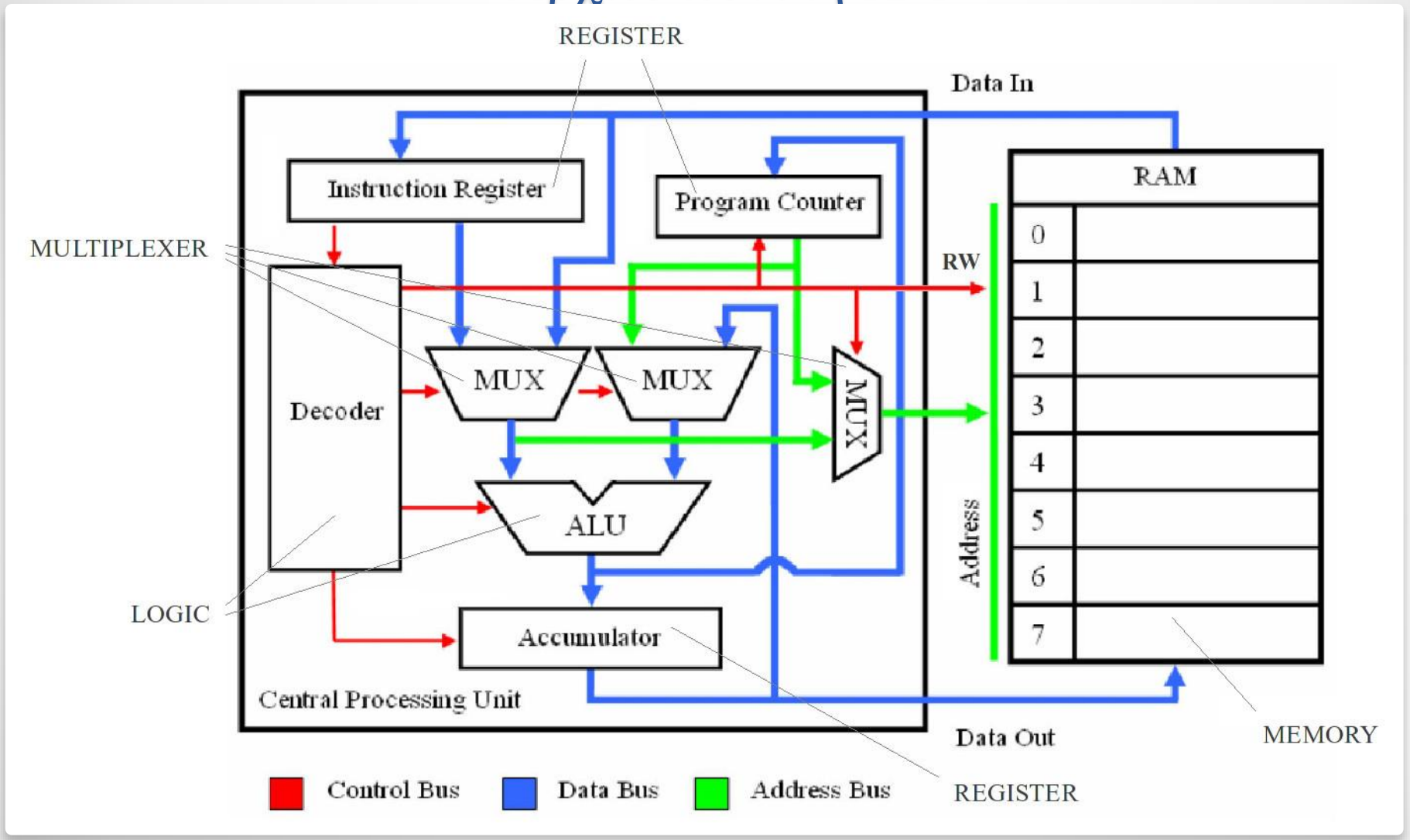

Πηγή : http://www.simplecpudesign.com/simple_cpu_v1/index.html

Αρχιτεκτονική Η/Υ

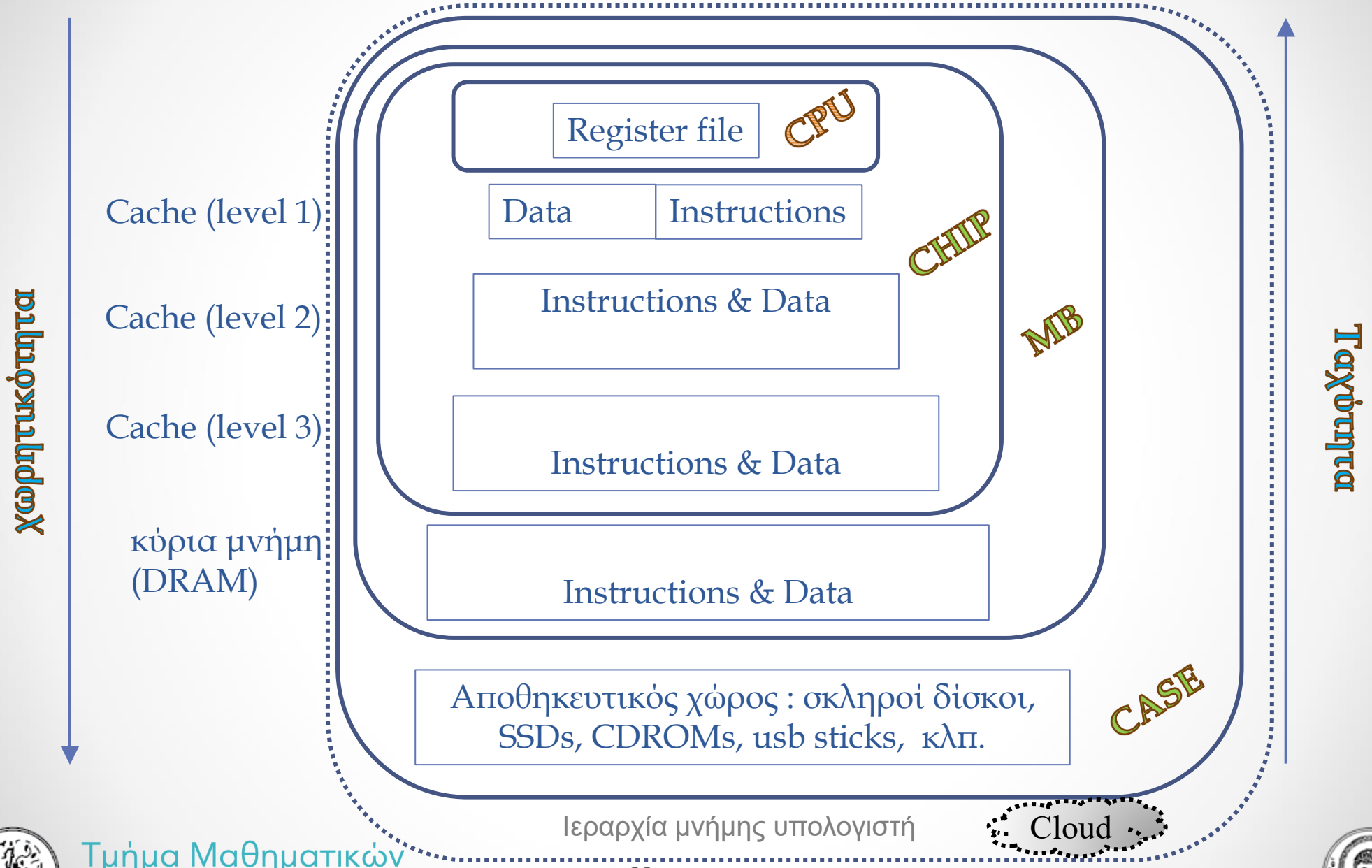

Ιεραρχία μνήμης υπολογιστή

Αρχιτεκτονική Η/Υ

Σχηματικό διάγραμμα μητρικής κάρτας PC

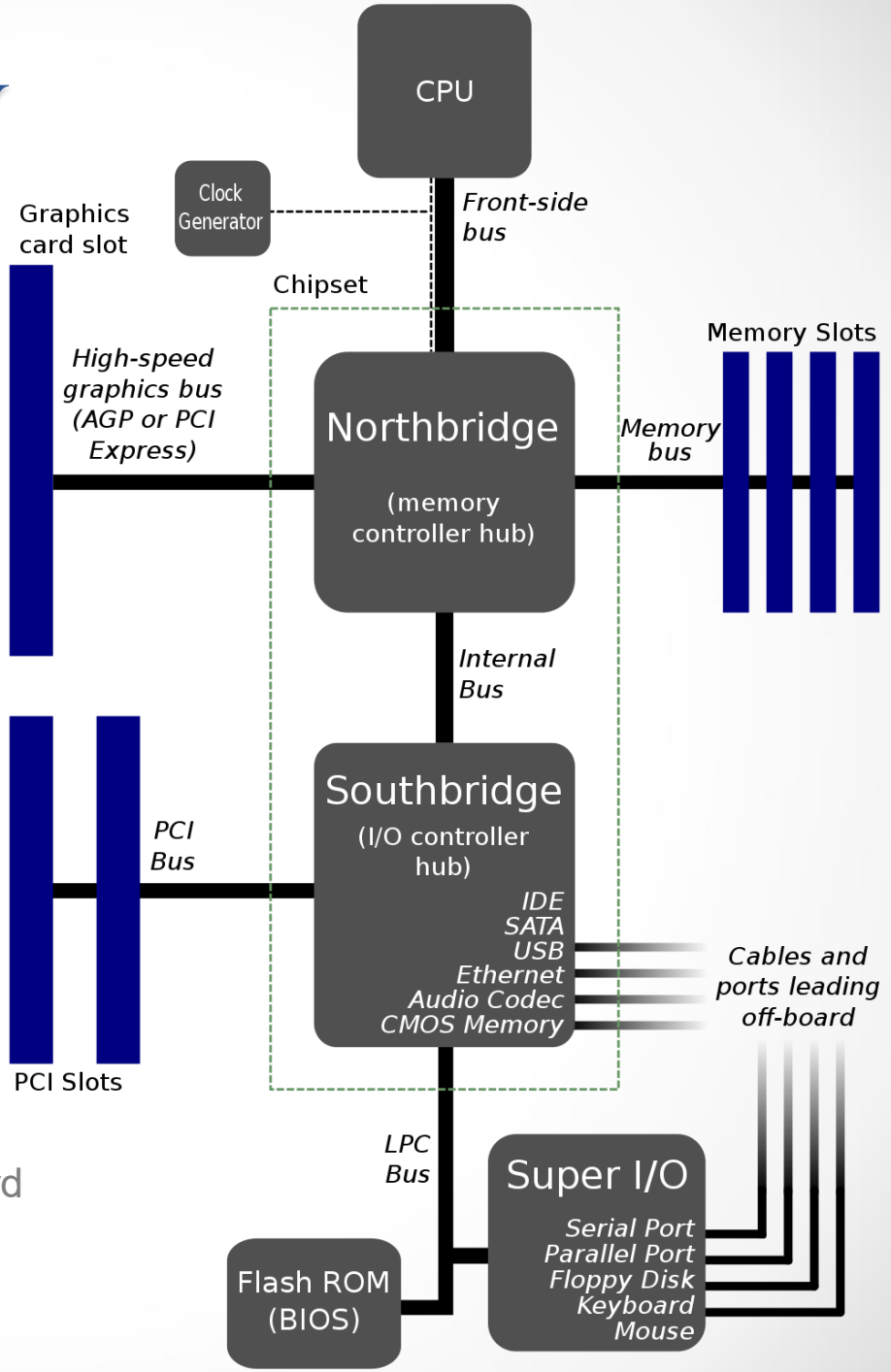

Πηγή : https://en.wikipedia.org/wiki/Motherboard

Αρχιτεκτονική Η/Υ



Εμπορικά διαθέσιμη (2023) CPU της εταιρίας Intel για PC

Intel founders



Gordon Moore in 1978

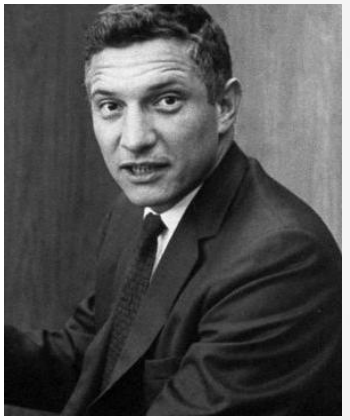

Robert Noyce in 1959

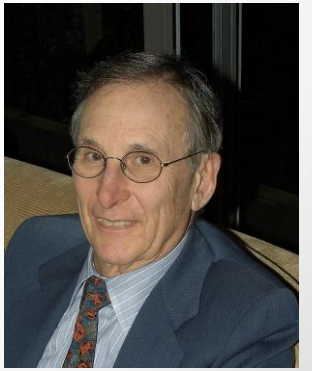

Arthur Rock in 2003

Αρχιτεκτονική Η/Υ

μητρική κάρτα τύπου microATX για PC

(παρατηρήστε τους σκασμένους πυκνωτές)

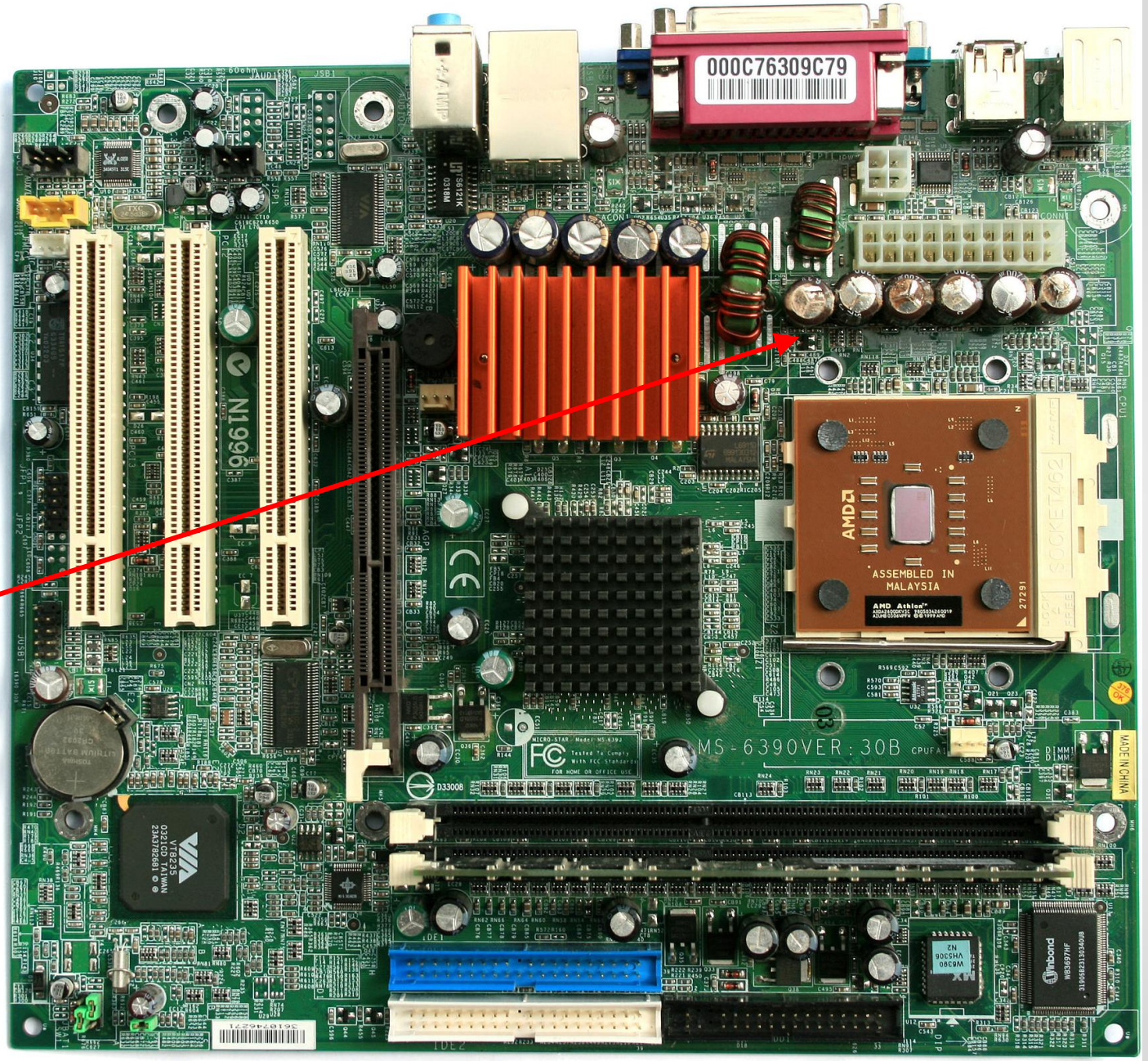

Πηγή : https://en.wikipedia.org/wiki/Motherboard

Πέρα από την αρχιτεκτονική von Neumann: Αντισυμβατική – πρωτότυπη υπολογιστική (Unconventional computing)

PT explain unconventional computing with images

I'm sorry, I am a text-based AI language model and do not have the ability to display images. However, I can describe unconventional computing and its different branches in detail.

Unconventional computing encompasses a wide range of computing paradigms and technologies that depart from the conventional Von Neumann architecture, which is based on a stored program and a central processing unit (CPU) executing instructions in a sequential manner. Some of the branches of unconventional computing include:

1. DNA computing - This branch of computing uses DNA molecules to store and manipulate data and perform computations. In this approach, chemical reactions are used to perform operations on the DNA.
2. Quantum computing - This branch of computing leverages the unique properties of quantum systems, such as superposition and entanglement, to perform computations. Quantum computers use qubits instead of classical bits to perform computations.
3. Optical computing - In this approach, information is processed using light instead of electricity. Optical computing has the potential to be faster and more energy-efficient than electronic computing.
4. Memristor computing - This type of computing uses memristors, which are circuit elements that can change their resistance based on the flow of current, to perform computations.
5. Molecular computing - This branch of computing uses molecular systems, such as molecular electronics and molecular biology, to perform computations.

These are just a few examples of unconventional computing. Each of these branches of unconventional computing offers unique benefits and challenges, and the field is rapidly evolving, with new technologies and approaches being developed all the time.

PT explain unconventional computing with public domain sources

Unconventional computing refers to computing paradigms and technologies that depart from the conventional Von Neumann architecture, which is based on a stored program and a central processing unit (CPU) executing instructions in a sequential manner. Unconventional computing encompasses a wide range of computing approaches, including quantum computing, DNA computing, molecular computing, optical computing, memristor computing, chaos computing, and more.

One example of unconventional computing is DNA computing. DNA computing is a branch of computing that uses DNA, biochemistry, and molecular biology to solve computational problems. DNA molecules can store and manipulate data and perform computations by performing chemical reactions. In 1994, researchers demonstrated the use of DNA to solve a simple mathematical problem, and since then, DNA computing has been used to solve increasingly complex problems.

Another example of unconventional computing is quantum computing. Quantum computing leverages the unique properties of quantum systems, such as superposition and entanglement, to perform computations. Quantum computers use qubits (quantum bits) instead of classical bits, which enables them to perform certain types of computations much faster than classical computers. For example, quantum computers can efficiently solve problems that are intractable for classical computers, such as breaking cryptographic codes.

Optical computing is another example of unconventional computing, in which information is processed using light instead of electricity. Optical computing has the potential to be faster and more energy-efficient than electronic computing because light can travel faster and carry more information than electrical signals.

These are just a few examples of unconventional computing, and the field is rapidly evolving, with new technologies and approaches being developed all the time. If you want to learn more about unconventional computing, I recommend starting with the Wikipedia articles on the various types of unconventional computing and the general concept of unconventional computing.

Απαντήσεις του ChatGPT Jan 30, 23 Version.
https://chat.openai.com/chat

Πέρα από την αρχιτεκτονική von Neumann: Αντισυμβατική – πρωτότυπη υπολογιστική (Unconventional computing)

PT explain unconventional computing with images

I'm sorry, I am a text-based AI language model and do not have the ability to display images. However, I can describe unconventional computing and its different branches in detail.

Unconventional computing encompasses a wide range of computing paradigms and technologies that depart from the conventional Von Neumann architecture, which is based on a stored program and a central processing unit (CPU) executing instructions in a sequential manner. Some of the branches of unconventional computing include:

1. DNA computing - This branch of computing uses DNA molecules to store and manipulate data and perform computations. In this approach, chemical reactions are used to perform operations on the DNA.
2. Quantum computing - This branch of computing leverages the unique properties of quantum systems, such as superposition and entanglement, to perform computations. Quantum computers use qubits instead of classical bits to perform computations.
3. Optical computing - In this approach, information is processed using light instead of electricity. Optical computing has the potential to be faster and more energy-efficient than electronic computing.
4. Memristor computing - This type of computing uses memristors, which are circuit elements that can change their resistance based on the flow of current, to perform computations.
5. Molecular computing - This branch of computing uses molecular systems, such as molecular electronics and molecular biology, to perform computations.

These are just a few examples of unconventional computing. Each of these branches of unconventional computing offers unique benefits and challenges, and the field is rapidly evolving, with new technologies and approaches being developed all the time.

Πιο …συμβατική αναζήτηση:

1. https://en.wikipedia.org/wiki/Unconventional_computing
2. https://link.springer.com/referencework/10.1007/978-1-4939-6883-1
3. https://link.springer.com/book/10.1007/978-3-319-33924-5

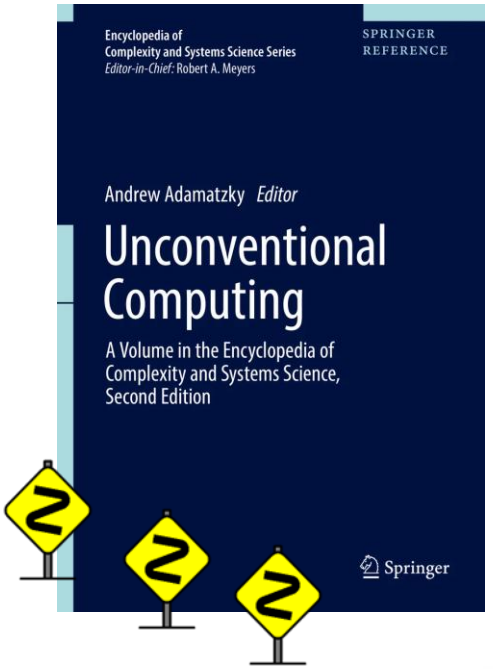

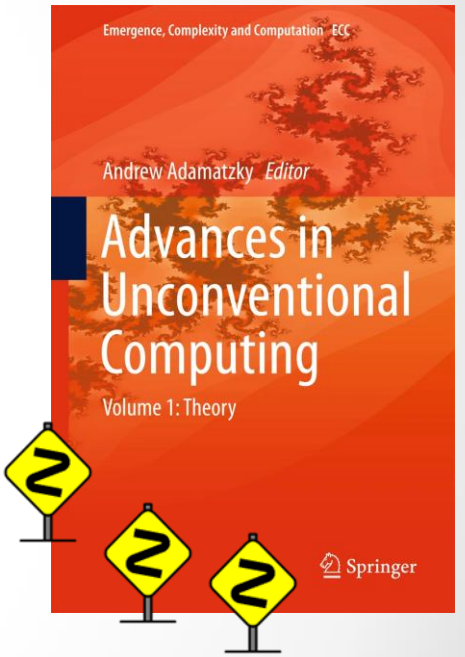

Σε κάθε περίπτωση:
1. Έλεγχος πηγών, είναι αξιόπιστες;
2. Διασταύρωση στοιχείων
3. Ανάγνωση με κριτική σκέψη

Παράδειγμα: Intel's neuromorphic computing architecture



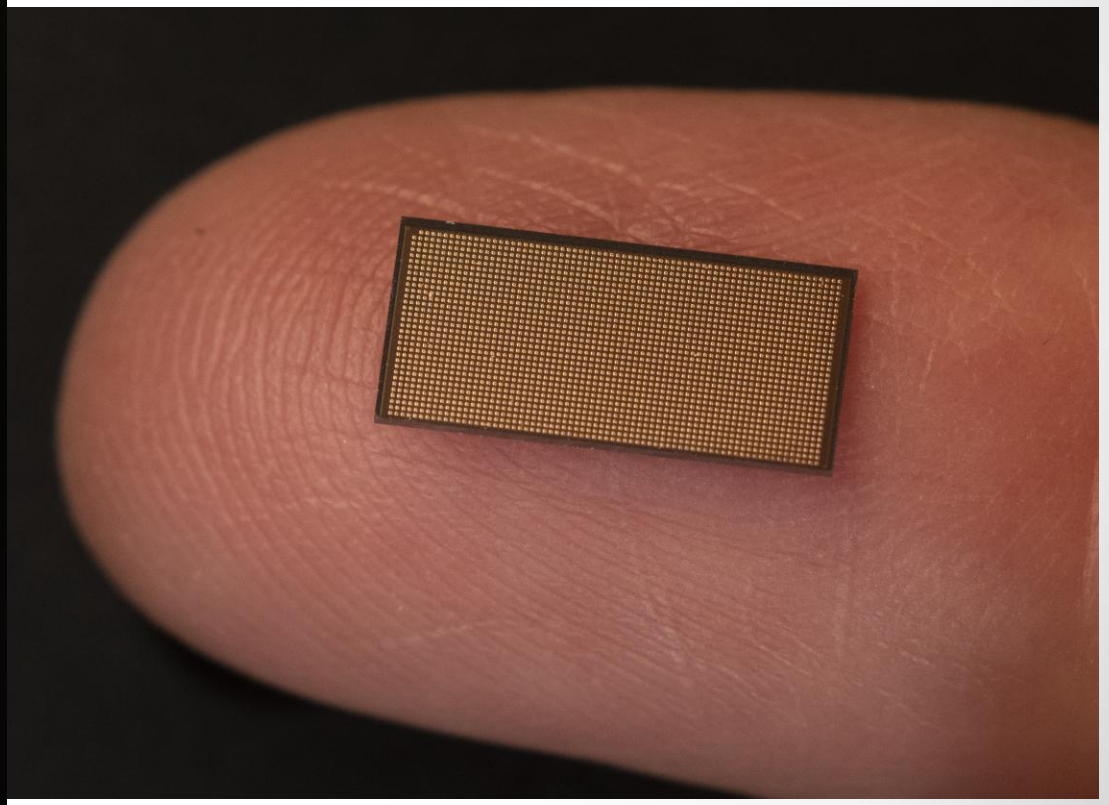

https://www.intel.com/content/www/us/en/research/neuromorphic-computing.html#

Παράδειγμα: Intel's neuromorphic computing architecture

https://download.intel.com/newsroom/2021/new-technologies/neuromorphic-computing-loihi-2-brief.pdf

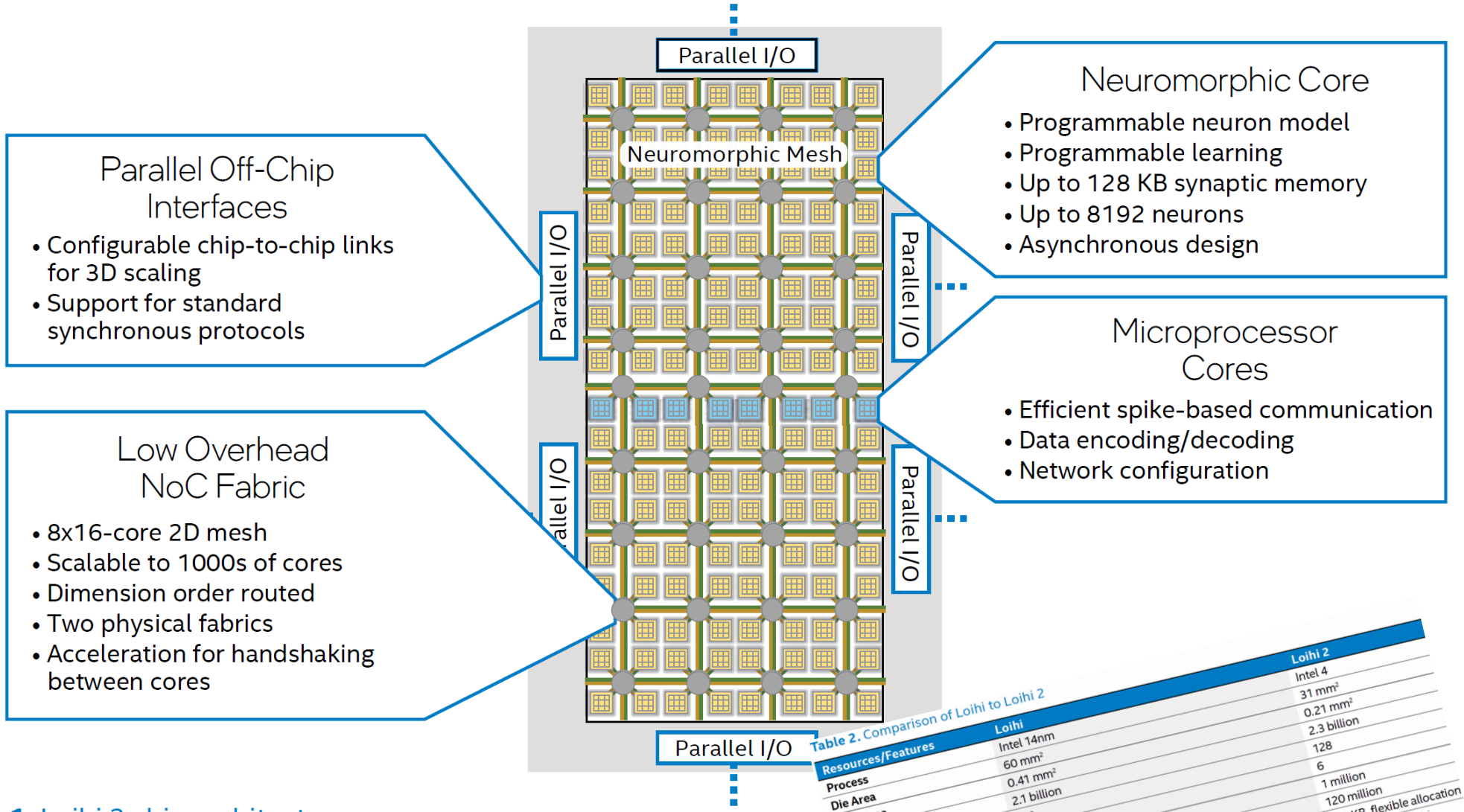

Figure 1. Loihi 2 chip architecture.

Table 2. Comparison of Loihi to Loihi 2

Resources/Features	Loihi	Loihi 2
Process	Intel 14nm	Intel 4
Die Area	60 mm²	31 mm²
Core Area	0.41 mm²	0.21 mm²
Transistors	2.1 billion	2.3 billion
Max # Neuron Cores/Chip	128	128
Max # Processors/Chip	3	6
Max # Neurons/Chip	128,000	1 million
Max # Synapses/Chip	128 million	120 million
Memory/Neuron Core	208 KB, fixed allocation	192 KB, flexible allocation

Ερωτήσεις & Απαντήσεις



